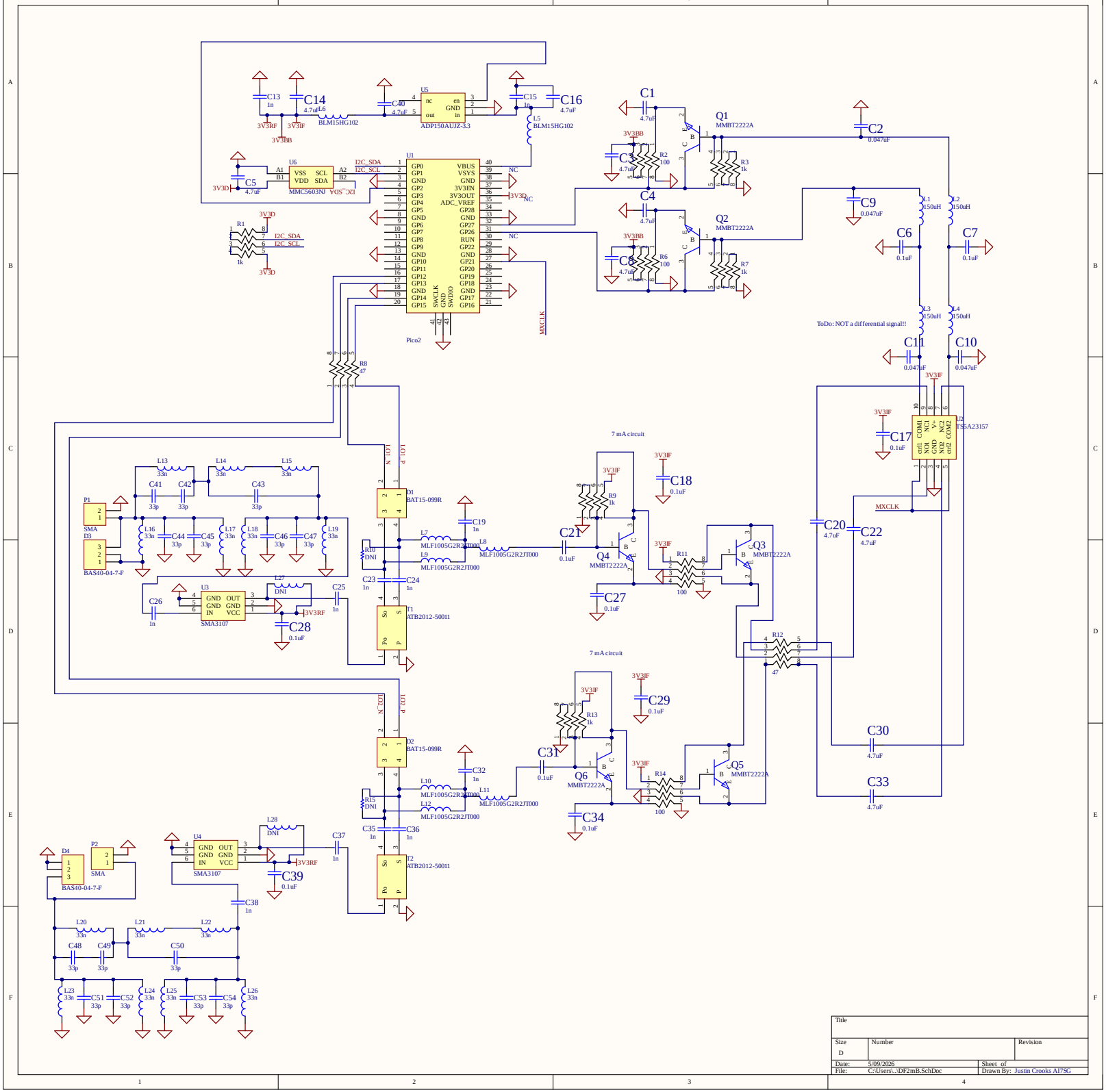

Title		
Size D	Number	Revision
Date: 5/09/2026		Sheet of
File: C:\Users\..\DF2mB.SchDoc		Drawn By: Justin Crooks AI7SG